REV	DESCRIPTION	BY	CHK	DATE	CO
M	REVISED & REDRAWN ON AUTOCAD	SNS	NSC	07-17-08	M73647
N	(3C) ADDED 5 GPM IN TABLE	KK	DRM	01-06-20	M111844
P	(6B) ADDED #15 SHAFT AND CONVERTED TO DANFOSS STANDARDS	JSK	DMM	06-07-23	CD-0229872

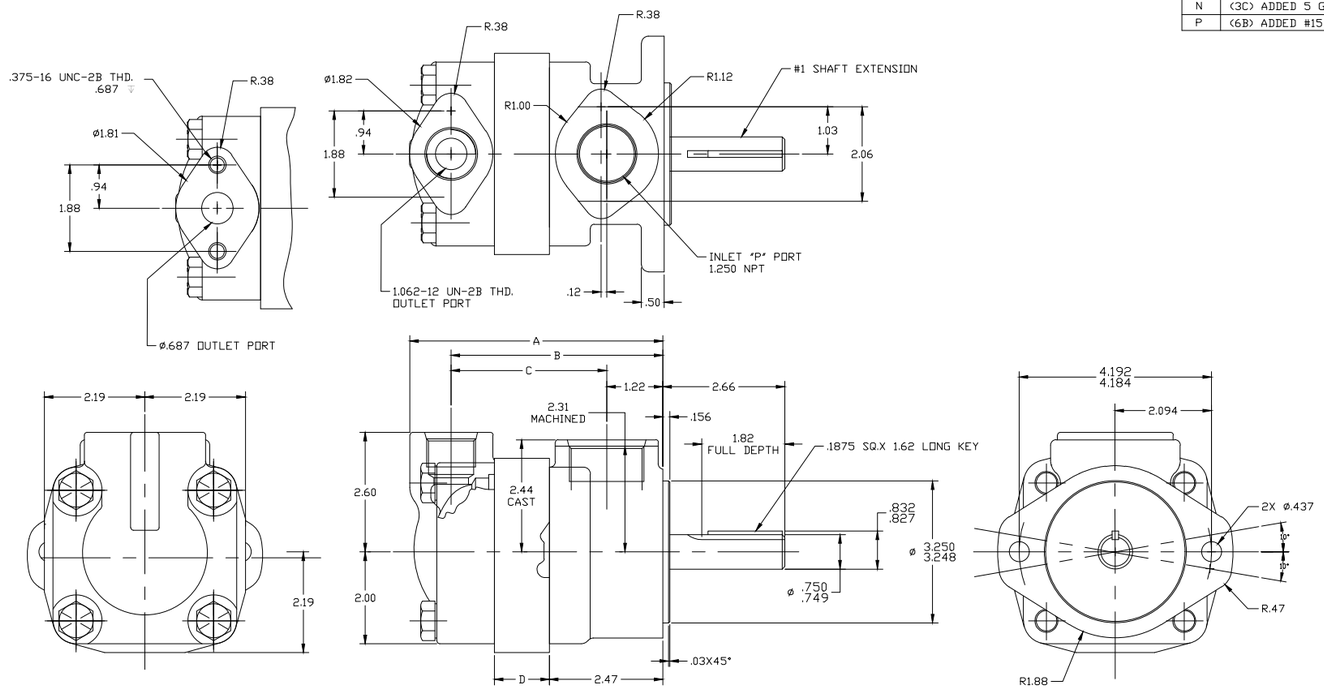

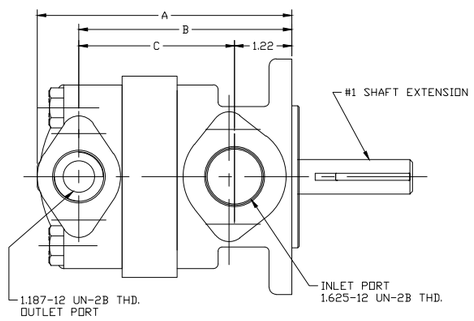

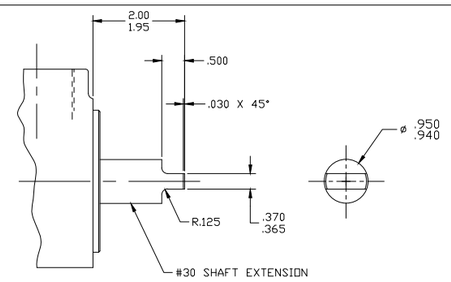

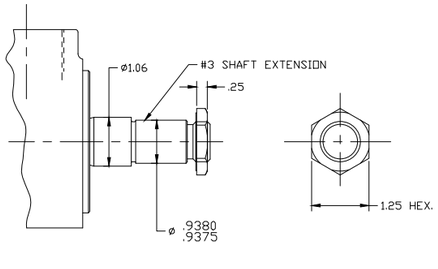

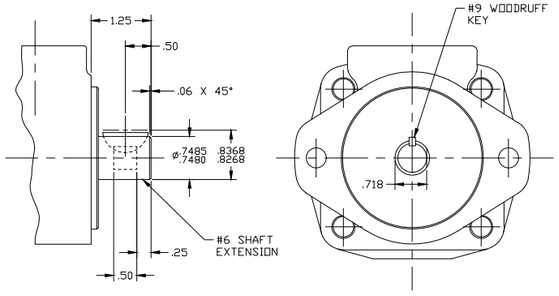

DELIVERY G.P.M. AT 1200 R.P.M. & 100 P.S.I	DIMENSION				MAX. R.P.M	MAX. P.S.I
	A	B	C	D		
6	4.93	4.02	2.80	.615	3400	2500
7	5.18	4.27	3.05	.865	3000	2500
8	5.18	4.27	3.05	.865	2800	2500
9	5.18	4.27	3.05	.865	2800	2500
11	5.38	4.47	3.25	1.062	2500	2500
12	5.52	4.61	3.39	1.200	2400	2200
13	5.52	4.61	3.39	1.200	2400	2200
5	4.93	4.02	2.80	.615	3600	3000

(N)

FOR THIS HIGH PERFORMANCE PRODUCT TO QUALIFY UNDER DANFOSS WARRANTY. IT IS TO BE USED IN CIRCUITS THAT ARE INITIALLY & CONTINUOUSLY FILTERED TO 25 MICRONS OR LESS.

FLUID RECOMMENDATION: SEE REFERENCE DATA SHEET M-2950-S

NORMAL ROTATION IS CLOCKWISE. FOR COUNTER CLOCKWISE ROTATION ADD SUFFIX "L" TO MODEL NO.

MODEL DESIGNATION - V20-****-**10- REFER TO DANFOSS MODEL CODE.

NOTE.

(1) SHAFT NUT TORQUE RECOMMENDED 70-80 LB-FT.

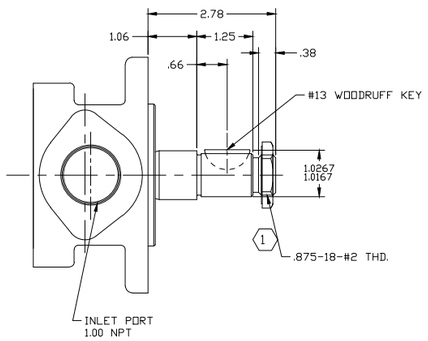

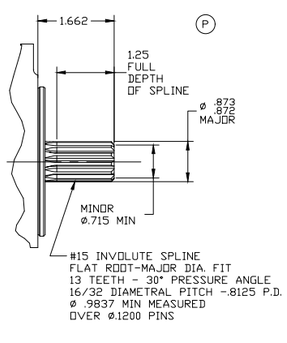

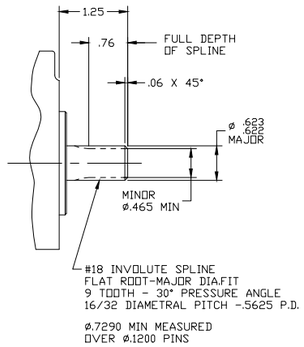

PRODUCT FIRST USED ON : V20 SERIES VANE PUMP

UNLESS OTHERWISE SPECIFIED: LEGACY DANFOSS ITEM INTERPRET PER VS 1-3-3-1

METRIC [ ] INCHES [X]

TOLERANCES: N/A MM INCH; .X ± 0.0 ± ---; .XX ± 0.25 ± .01; .XXX ± --- ± .010; ∠ ± 2°

UNSPECIFIED RADII ARE: 0.25mm (.010 IN)

UNSPECIFIED SHAFT ANGLES: ---

SURFACE FINISH: 3.2 µm (125 µIN)

NO BURRS [ ] SIN

LAB OFFICE

—

THE REPRODUCTION, DISTRIBUTION AND UTILIZATION OF THIS DOCUMENT AS WELL AS THE COMMUNICATION OF ITS CONTENTS TO OTHERS WITHOUT EXPRESS AUTHORIZATION IS PROHIBITED. OFFENDERS WILL BE HELD LIABLE FOR THE PAYMENT OF DAMAGES. ALL RIGHTS RESERVED IN THE EVENT OF THE GRANT OF A PATENT, UTILITY MODEL OR DESIGN. (PER ISO 16016)

DRAWN BY/DATE	VECHENT	05/29/03	
CHECKED BY/DATE	AJA	07/25/03	
ENGRG BY/DATE	—	—	
MFG BY/DATE	—	—	
CHANGE NO	REV ITEM	DESIGNATE	REVISED
CD-0229872	P		06-07-23

DRAWING: —

RAW MATERIAL SPECIFICATION —

DRAWING INTERPRETATION PER 50460074

DWG NO 280700 REV P

DRAWING TITLE
INSTALLATION -
VANE PUMP

SCALE 1/1
SHEET 1 OF 1

PART NO 280700